CITY OF NEWPORT BEACH MULTIPLE VESSEL MOORING SYSTEM

Civic Center Community Room - 100 Civic Center Drive, Newport Beach, CA 92660

May 21, 2014 - 5:00 PM

Multiple Vessel Mooring System(MVMS) Committee

Harbor Commissioners:
Brad Avery-Chair
Duncan McIntosh

Staff Members:
Chris Miller
Shannon Levin

---

1. CALL MEETING TO ORDER - Welcome and Introductions

2. ROLL CALL

3. PUBLIC COMMENTS

Public comments are invited on agenda and non-agenda items generally considered to be within the subject matter jurisdiction of the Committee. Speakers must limit comments to three (3) minutes. Before speaking, we invite, but do not require, you to state your name for the record. The Committee has the discretion to extend or shorten the speakers' time limit on agenda or non-agenda items, provided the time limit adjustment is applied equally to all speakers. As a courtesy, please turn cell phones off or set them in the silent mode.

4. APPROVAL OF MINUTES

A. April 28, 2014 Meeting Minutes

5. CURRENT BUSINESS

A. Review and Discuss Recommendation to City Council

B. Next Steps

6. ROUNDTABLE OR ADDITIONAL PUBLIC COMMENTS

7. DATE AND TIME FOR NEXT MEETING

A. To be determined.

8. ADJOURNMENT

This Committee is subject to the Ralph M. Brown Act. Among other things, the Brown Act requires that the Committee agenda be posted at least seventy-two (72) hours in advance of each regular meeting and that the public be allowed to comment on agenda items before the Committee and items not on the agenda but are within the subject matter jurisdiction of the Committee. The Committee may limit public comments to a reasonable

amount of time, generally three (3) minutes per person.

It is the intention of the City of Newport Beach to comply with the Americans with Disabilities Act ("ADA") in all respects. If, as an attendee or a participant at this meeting, you will need special assistance beyond what is normally provided, the City of Newport Beach will attempt to accommodate you in every reasonable manner. If requested, this agenda will be made available in appropriate alternative formats to persons with a disability, as required by Section 202 of the Americans with Disabilities Act of 1990 (42 U.S.C. Sec. 12132), and the federal rules and regulations adopted in implementation thereof. Please contact the City Clerk's Office at least forty-eight (48) hours prior to the meeting to inform us of your particular needs and to determine if accommodation is feasible at (949) 644-3005 or cityclerk@newportbeachca.gov.

NEWPORT BEACH

ITEM TITLE: April 28, 2014 Meeting Minutes

ATTACHMENTS:

Description

April 28, 2014 Draft Meeting Minutes and Handouts

Multiple Vessel Mooring System Ad-Hoc Committee Meeting
Committee Action Minutes – DRAFT UNTIL APPROVED
Meeting Date: Monday April 28, 2014 – 4:00 p.m., Newport Coast Conf. Room
www.NewportBeachCA.gov/MVMS

1. The meeting was called to order at 4:00 p.m. by Chair Avery.
2. Roll Call:
   MVMS Ad-Hoc Committee – Harbor Commissioners:
   Brad Avery – Chair Duncan McIntosh
3. Public Comments on Non-Agenda Items. None.
4. Minutes. 4/14/14 Minutes Approved.
5. Current Business
   A. Review and Discuss Project Components
   a. Seaflex System and URS
   Brian Hylland from Seaflex and Prabin Tuladhar from URS were in attendance to present concepts for Seaflex and the floating platforms. Hylland talked at length about the technology of the bands and use with the helix-anchor system (handouts). Seaflex dampens the movement or swing of moorings/floats. The system can be attached under floats to maximize navigable water space for deeper keeled vessels. Tuladhar presented illustrations on how the floats, Seaflex, and anchors can be installed. Seaflex uses polyester bands that stretch with little metal for securing to the weight and floats. The bands constantly stretch and retract prohibiting marine growth. The Seaflex system requires very little maintenance but still requires regular inspections. 2-4 bands work as a system to secure floating platforms. Tuladhar mentioned that the floats and anchor systems must be engineered to withstand extreme stresses of wind and tide fluctuations. Chris Miller added that a concept can be drawn that will provide a rough cost estimate using Seaflex and wooden floats. Tuladhar also provided some design issues to consider for the floating platforms.
   b. Newport Mooring Association participation and outreach
   Chair Avery reiterated how he appreciated the participation from the Newport Mooring Association and other mooring permittees. He added that additional outreach to all of the mooring permittees, including non-Newport Mooring Association members, was necessary.
   c. Rules, regulations, and how to use the docks
   Due to time constraints, this topic wasn't covered in depth at this meeting.
   d. Project notification to all mooring permittees
   See item above.
   B. Next Steps
   Chair Avery briefly described the timeline and the possible June 10 Council meeting were the report will be presented.
6. Roundtable or Additional Public Comments. None.
7. Date and Time for Next Meeting. TBD.
8. Adjournment around 6:00 PM.

The agenda for April 28, 2014 MVMS Ad-Hoc Meeting was posted on Wednesday April 23, 2014 at 4:28pm. on the Civic Center Electronic Bulletin Board and Binder, and Wednesday April 23, 2014 at 3:26pm. on the City's website.

_____
MVMS Ad-Hoc Committee Chair

MULTIPLE VESSEL MOORING SYSTEM
4/28/14
CONCEPT

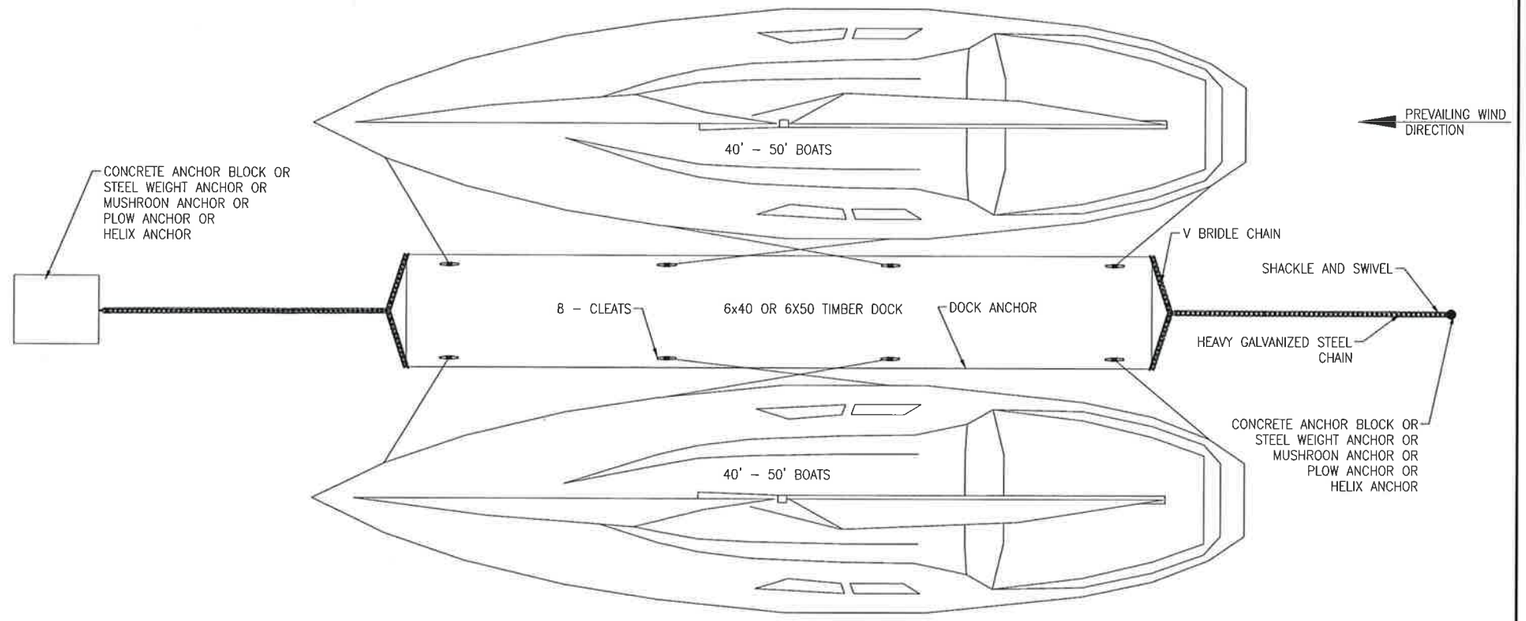

1 / C-1 MOORING DOCK PLAN
SCALE: 1/4"=1'-0"

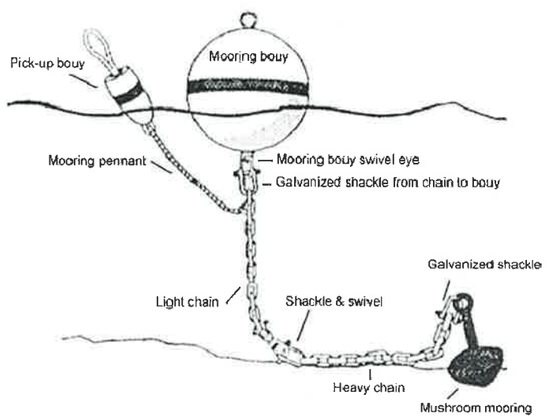

4 / C-1 TYPICAL CHAIN MOORING
SCALE: NTS

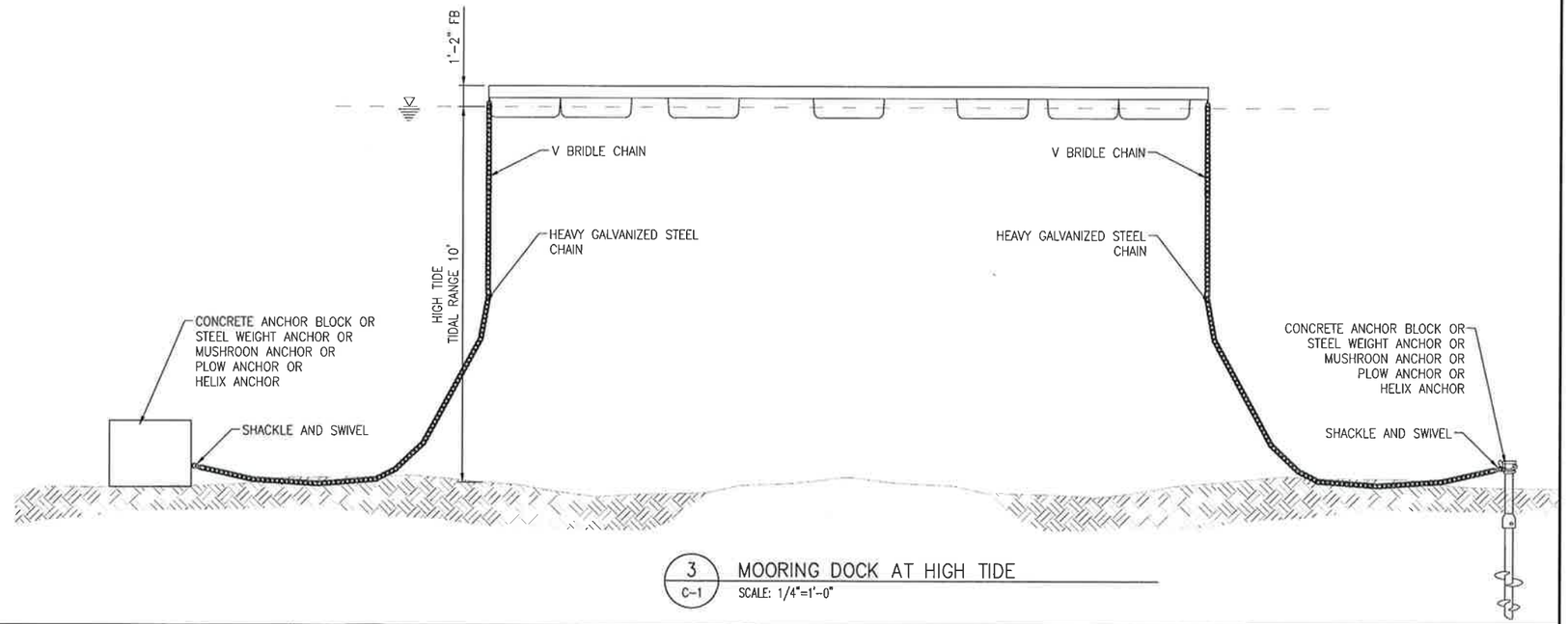

3 / C-1 MOORING DOCK AT HIGH TIDE
SCALE: 1/4"=1'-0"

NO.	DATE	DESCRIPTION	BY

REVISIONS

URS
310 Golden Shore, Suite 100
Long Beach, CA 90802
Tel: (562) 308-2300
Fax: (562) 256-7905

ENGINEER –
DESIGNER –
CAD OPERATOR –
CHECKER –
PROJECT MANAGER –

NEWPORT BEACH MOORING IMPROVEMENT
MOORING DOCK WITH SEAFLEX – CONCEPT 2

SCALE AS NOTED
PROJECT NUMBER –
DRAWING NUMBER C-2

Path: G:\Projects\Rhm\Newport Beach Mooring\
Xrefs:
Filename: Mooring Concept.dwg | Plot by: prabin_tuladhar | Plot Date: 04/24/14 – 2:58 pm | Last Save by: IKE_CHUNG | LAYOUT: Chain Mooring Dock | ON: 11/4/2008

MULTIPLE VESSEL MOORING SYSTEM
APRIL 28, 2014
Concept

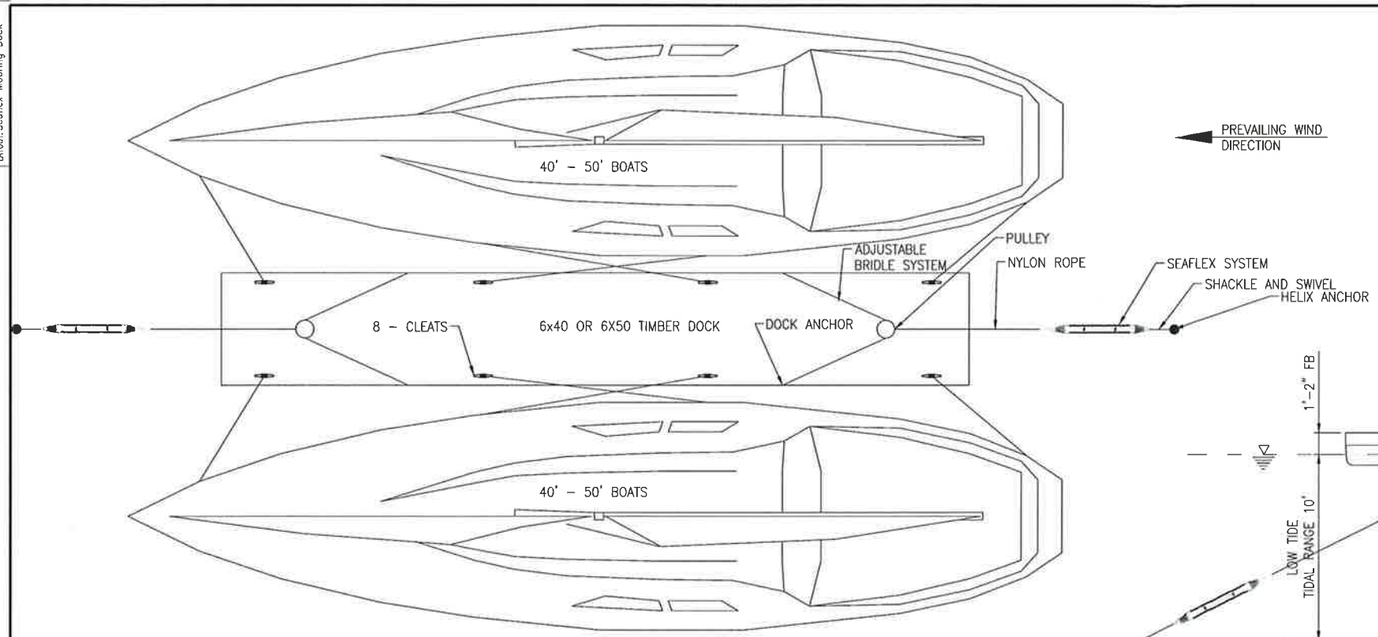

1 C-1 MOORING DOCK PLAN
SCALE: 1/4"=1'-0"

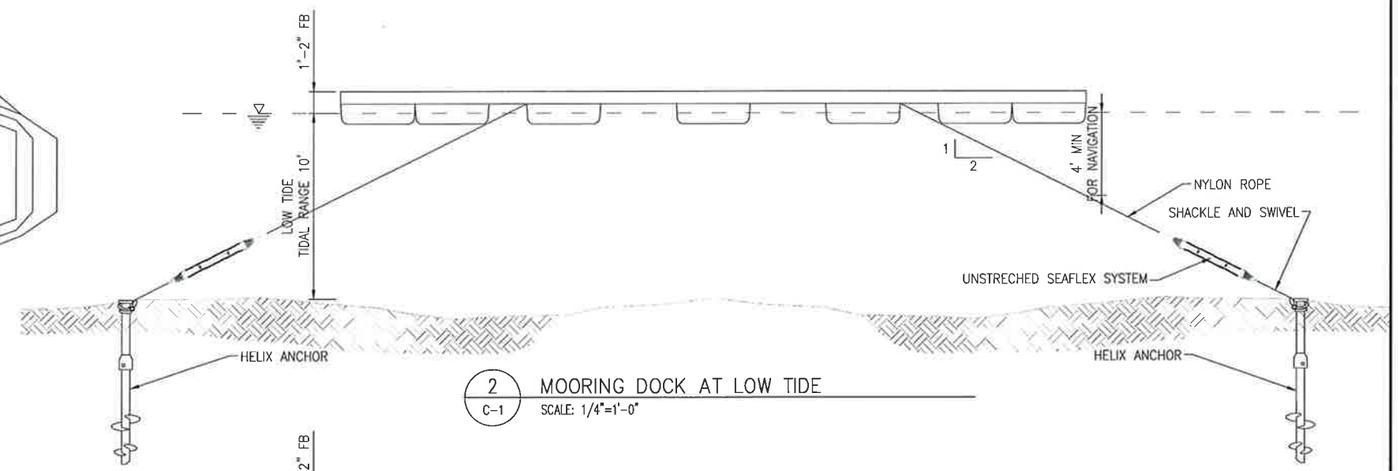

2 C-1 MOORING DOCK AT LOW TIDE
SCALE: 1/4"=1'-0"

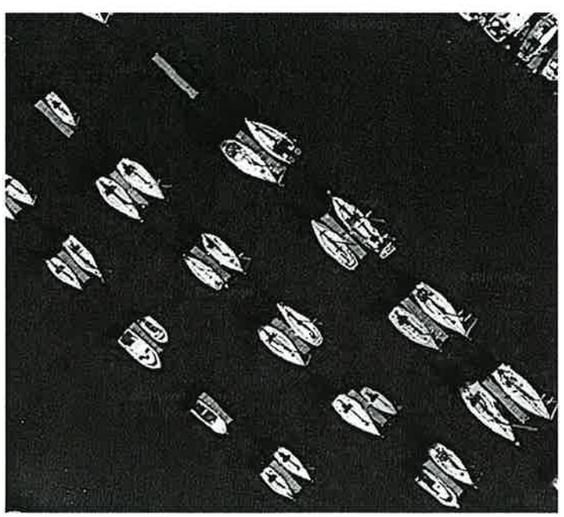

4 C-1 SIMILAR MOORING SYSTEM
SCALE: NTS

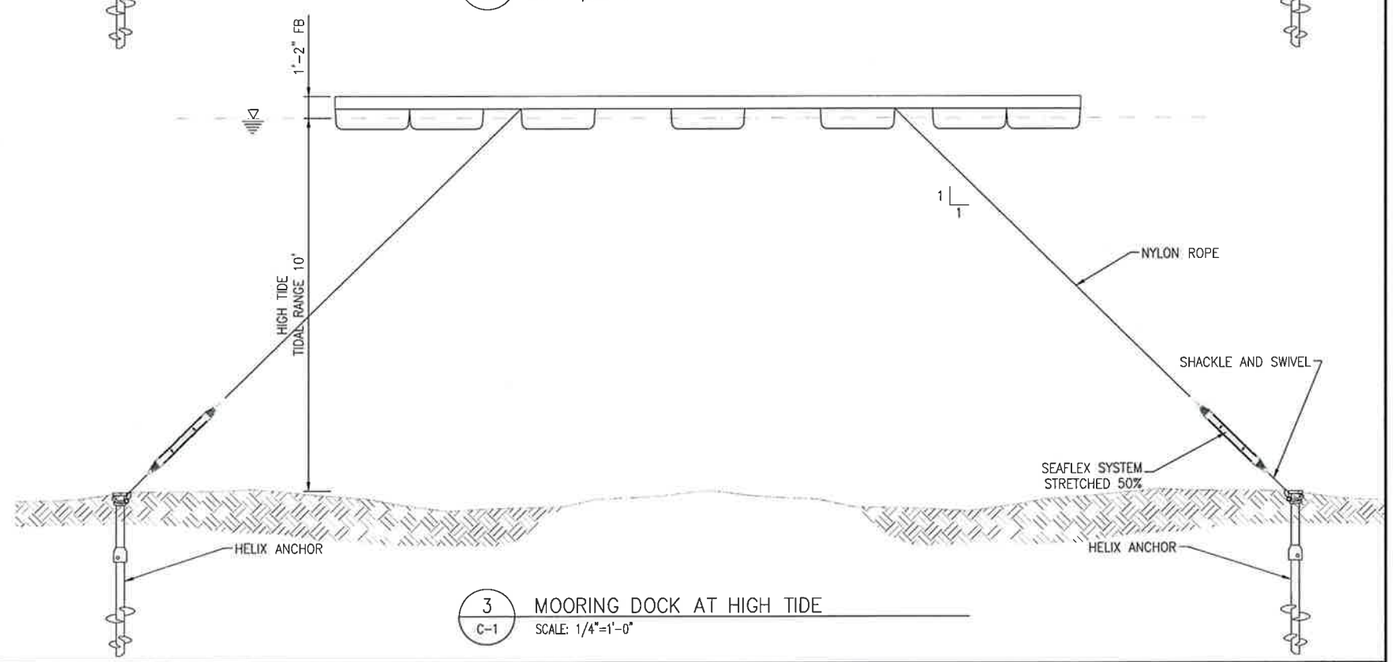

3 C-1 MOORING DOCK AT HIGH TIDE
SCALE: 1/4"=1'-0"

NO.	DATE	DESCRIPTION	BY

REVISIONS

URS
310 Golden Shore, Suite 100
Long Beach, CA 90802
Tel: (562) 308-2300
Fax: (562) 256-7905

ENGINEER –
DESIGNER –
CAD OPERATOR –
CHECKER –
PROJECT MANAGER –

NEWPORT BEACH MOORING IMPROVEMENT
MOORING DOCK WITH SEAFLEX – CONCEPT 1

SCALE AS NOTED
PROJECT NUMBER –
DRAWING NUMBER C-1

Path: G:\Projects\Rhm\Newport Beach Mooring\
Xrefs:
Filename: Mooring Concept.dwg
Plot by: prabin_tuladhar
Plot Date: 04/24/14 – 3:00 pm
Last Save by: IKE_CHUNG
LAYOUT: Seaflex Mooring Dock
ON: 11/4/2008

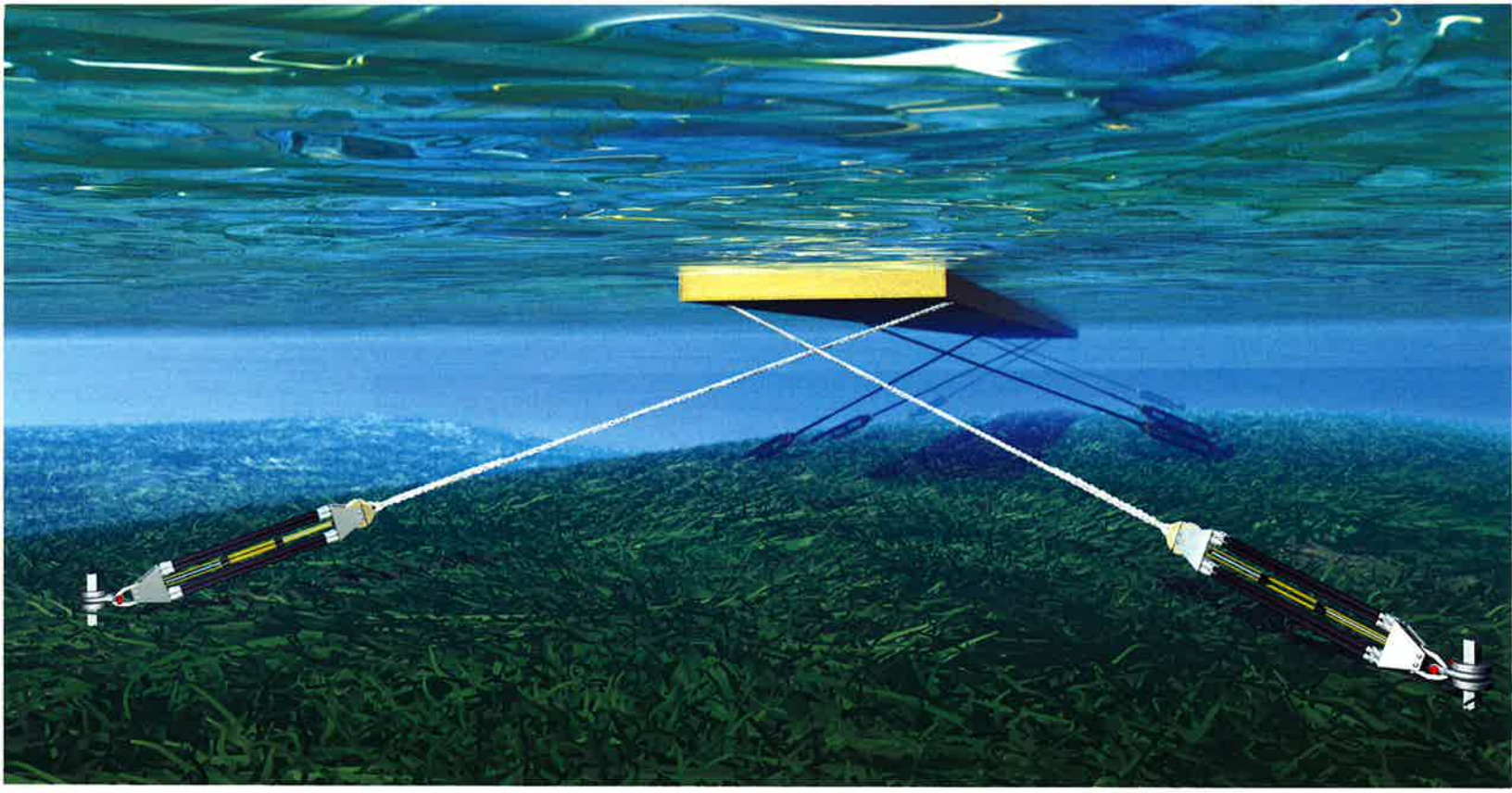

ENVIRONMENTAL MOORINGS FOR ANY FLOATING DEVICES, USED WITH ANY ANCHOR, ANYWHERE.
ILLUSTRATED WHEN USED FOR A DOCK / PONTOON IN A MARINA WITH HELIX EMBEDMENT ANCHORS.

30 years in rough conditions

Seaflex is an environmentally friendly elastic mooring system that secures pontoons and buoys in every ocean on the planet. The system is highly resistant to corrosion and does not damage sensitive ecosystems on the seabed. Seaflex moorings are unrivalled in their ability to safely and securely adjust with tides and wave motion. The unique design allows it to slowly elongate and return in a smooth, even movement. In conjunction with initial pre-tension, Seaflex moorings provide progressive resistance to wave-motion in both the vertical and lateral plane. Disturbing wakes in harbors and marinas are therefore largely negated, significantly reducing the risk of damage to moored boats.

Seaflex moorings provide a flexible and secure solution trusted in all weather conditions. Navigation buoys moored with Seaflex do not change position to the same degree as chain moorings, a feature which greatly improves marine safety in narrow straits and in harbors. The system is one of the most reliable on the market, whether for complete marinas, breakwaters, buoys, free-floating docks or fish farms. Seaflex the environmental mooring solution, trusted to withstand the forces of nature without leaving any marks.

Seaflex®

The Environmental Mooring Solution

SEAFLEX Models

The length and quantity of SEAFLEX hawsers is custom made for each project. The quantity of hawsers depends on the forces involved and the length of the hawsers is determined by the water level variation and wave height. All SEAFLEX come with a By-Pass for safety, keeping the rubber from over-extension in situations where the forces are bigger than what was originally calculated for. Depending on anchoring methods etc, SEAFLEX uses different end attachments with a variety of combination possibilities.

Integrated Thimble for rope

Integrated Shackle for anchor

Four key factors

The Environment

All SEAFLEX moorings meet international standards for environmental protection. The moorings are made from the highest quality stainless steel, to offer the best protection against corrosion. SEAFLEX does not release other pollutants into marine ecosystems or drag along the seabed, which also helps limit any impact on the surroundings. This makes SEAFLEX particularly well-suited for use with mooring pontoons and buoys in sensitive areas, such as those near coral reefs, areas of marine flora and historic sites.

Technology

SEAFLEX provides secure moorings even under the worst weather conditions. The moorings are self-regulating according to variations in water level and are effective in all water depths. This flexibility ensures that moored pontoons are not exposed to unnecessary wear. Our choice of materials also guarantees a minimal risk of corrosion.

Quality

The size of each mooring is calculated based on the active forces with the help of our own software, JFlex. Factors crucial to these calculations are variations in water-level, wind, waves, current, depth and the total air resistance caused by boats. All of these calculations are freely available to the buyer. All interaction with our customers – from tenders to installations and support for the life of the product – follow structured processes and are fully documented.

Value for your Money

SEAFLEX requires substantially less maintenance than other mooring systems due to the fact that the system's components are exceptionally durable. Consider the difference compared with chains for example, where iron links must be replaced due to rust, wear and fatigue. Other advantages with SEAFLEX are low initial outlay, minimal transport weight, quick and easy installation, and a low cost per meter thanks to the integrated rope.

Seaflex Inc. 16902 Bolsa Chica Street, Suite 201, Huntington Beach, CA 92649
Telephone: (310) 548 9100 Fax: (321) 406 0612
seaflex.inc@seaflex.net
www.seaflex.net

Seaflex®

The Environmental Mooring Solution

It's only natural that people are interested in buying a durable, technologically-advanced, environmentally-friendly product. The SEAFLEX system is designed with exactly this in mind.

Seaflex vs Piles

One of Seaflex biggest benefits is its unique way of stabilizing the pontoon/dock by always being under tension. The dampening effect also leads to less wear and tear, especially under bad weather conditions. With piles there is nothing keeping your pontoon/dock from going up and down. The nonexistent downward force allows the dock to smash up against the piles during bad weather, leading to damage on the piles, pile guides, pontoons, and boats. The only movement stopped by the piles is the sideways movement which on the other gets stopped rather abrupt when the pontoon/dock hits the pile guide. A Seaflex moored pontoon on the other hand lays stable and secure for boat owners to safely walk on. On the case of steel piles there are also more advantages, such as the boat owners not having to exchange their sacrificial anodes as frequently when stationed in a marina using Seaflex. If the marina has steel piles or chain the anodes gets corroded and "sacrificed" much faster due to the large amount of steel in the water.

The initial cost of a mooring system varies depending on factors like water depth, layout and the surrounding forces. When installing in deep water for example, piles are very costly (or even impossible if too deep) while Seaflex becomes competitive due to its integrated rope that can handle deep installations. Even at times where Seaflex initially seems like the more costly option, over time it beats the cost of piles due to its low installation cost, fast and easy inspections and low maintenance. A pile inspection is a full search of the pile for any stress cracks, weakening and/or corrosion as well as regular maintenance on the pile guides. Seaflex inspections on the other hand are very fast due to the minimal metal parts of the system. Piling installation equipment is also costly to move and set up for each project while Seaflex sometimes can be installed by one person with equipment small enough to fit in the back of a car.

Bottom Condition

Depending on the bottom consistency, piles could be an expensive or at times even impossible solution for securing the pontoon/dock. If the bottom is soft the piles may need to be battered down far which becomes costly, and if there is rock bottom there is a need for drilling a pile socket, also rather costly and time consuming. At some locations electrical cables or pipes are run along the bottom, making it hard and sometimes forbidden to use piles. Seaflex, on the other hand, can be installed in practically any situation regardless of bottom conditions such as rock, mud, silt, sand, coral etc. It can be paired up with any anchor necessary; embedment anchors, gravity anchors, rock bolts or coral spike.

The Environment / Longevity

The first Seaflex was installed in 1981, that original product is still in use today (2011). The moorings minimal steel parts are made from the highest quality stainless steel, offering good protection against corrosion. Steel piles corrode over time and slowly release metal into the water, which weakens the system. When battering in a pile you also disturb the underwater ecosystem which is one of the reasons why Seaflex sometimes is the only gentle enough option for areas with sensitive marine life. Seaflex meets all international environmental standards and when used with an embedment anchor the complete mooring footprint can be kept to a minimum.

Aesthetics

With Seaflex you do not see any piles sticking out of the water, which gives the marina a nice sleek look. Piles are an eye sore, especially at low water and there is smell due to the sea growth. The top of the piles are also perfect places for birds, which in itself contributes to a dirtier marina. A marina with piles is also noisy with the rise and fall of tides. Boat owners trying to sleep on their vessels highly appreciate not hearing those noises when staying at marinas using Seaflex. Overall Seaflex provides a "hidden" mooring system for the most sleek, modern look of your marina.

Adaptability

Seaflex continues to prove itself as the most modern and technologically advanced mooring system around, being the first choice even in the most unique situations. The "invisible" nature of the product does not only contribute to the sleek and modern look of the marina, it also stays out of the way in situations of big sails, oars and ice. For instance Seaflex is the active choice in several rowing arena installations.

In situations where the water freezes you get the option to either easily remove the Seaflex before the winter season or, in situations with no vertical ice sheet movement, leave it in knowing that it will stretch up and down. Piles can get jacked up and even pulled out in these conditions. Overall Seaflex is a light, easy to handle product adapting to all natures forces without leaving any marks. With over 1000 installations, replacing piles all over the world, the Seaflex team stands ready to take on your challenge!

Seaflex® SPRING

SHOCK-ABSORBING SYSTEM FOR MOORING PONTOONS/FLOATING DOCKS TO SHORE

Seaflex Spring is a highly efficient shock absorber. Gently absorbing wide variations in loads, Seaflex Spring is ideal for mooring pontoons/floating docks to shore. At peak loading, conventional steel springs reach their limits and become stiff. However, Seaflex Spring continues to function smoothly without unnecessary strains on pontoons/floating docks or boats.

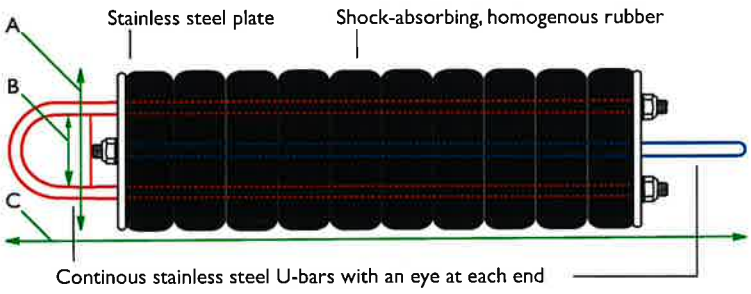

Each Seaflex Spring consists of a shock absorber made of a special, homogenous rubber and two continous U-bars that form an eye at each end. All the metal components are of high grade stainless steel.

A: 5.91 in. / 150 mm B: 2.32 in. / 59 mm C: 25.67 in. / 652 mm

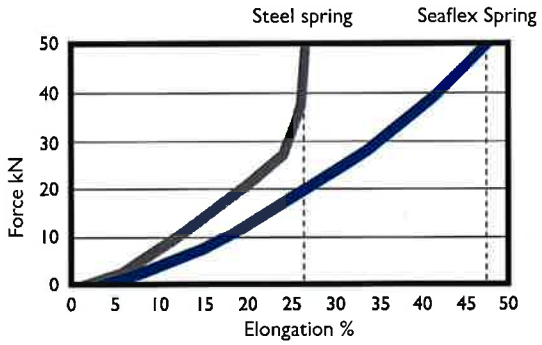

Seaflex Spring retains its shock-absorbing properties through a far greater range of loads than a conventional steel spring.

Seaflex Inc. 16902 Bolsa Chica Street, Suite 201, Huntington Beach, CA 92649
Telephone: (310) 548 9100 Fax: (321) 406 0612

seaflex.inc@seaflex.net
www.seaflex.net

Seaflex®

Environmental Moorings for Docks, Pontoons, Wave Attenuators, Mooring Buoys, Navigational Buoys and all other Floating Devices.

Handles all Depths

SEAFLEX moorings works as well in shallow water as it does in deep water. With over 1000 documented installations world wide we have references with water depths from 1 to 90 meter (3 to 300 feet).

Handles all Tides

SEAFLEX has successful projects with 7 meter (23 feet) tidal fluctuation as well as 25 meter (82 feet) artificial variation. The elastic mooring system, slowly elongates and retracts in a smooth, even movement.

Horizontal and Vertical Stability

SEAFLEX mooring systems are always under tension which adds stability to the pontoon/dock making it horizontally stable. The SEAFLEX unique design keeps the marina in position without the use of noisy, unaesthetic piles.

Small Swing Radius

The stability of SEAFLEX is also beneficial when used with swing mooring buoys. Using SEAFLEX instead of chain allows for a smaller swing radius which means more moorings in a given area and a more accurate position for navigation buoys.

The Environmental Choice

Mooring docks and buoys with chain creates deadspots around the anchor, damages eelgrass and ruins underwater environments. The SEAFLEX mooring system never touches the sensitive seabed, having a minimal impact on grass and coral growth. With an embedment anchor the foot print of the anchor itself can also be minimized.

The moorings exceptionally durable components release no pollutants into the marine ecosystem and has a very long life line. The first SEAFLEX was installed in 1981, that original product is still in use today. SEAFLEX withstands the forces of nature without leaving any marks.

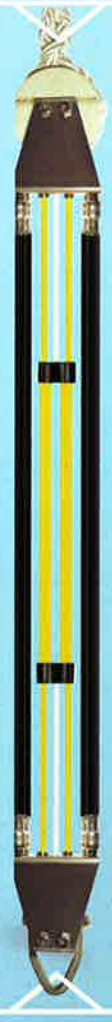

Anchor Seaflex with: Embedment Anchors such as Helix Anchors, Gravity Anchors such as Concrete Blocks, or Rock Bolts and Coral Spikes for special occasions.

Seaflex®

Project: Milford, Connecticut

Has survived several storms since 2003

INSTALLED 2003

WIND 75 mph

WAVE 1-2 ft

DOCKS 32 ft x 4

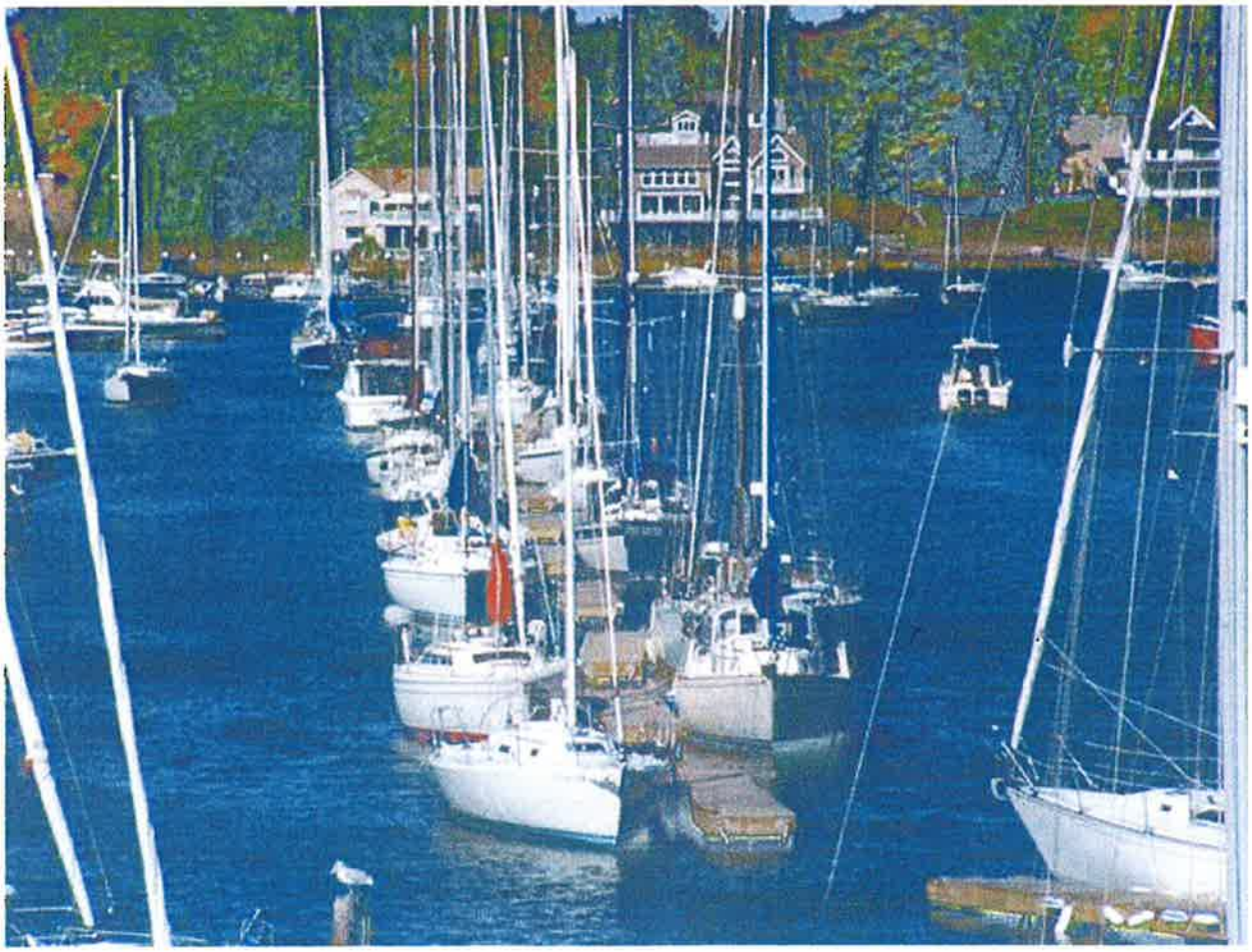

Seaflex AB Stöcksjö Kustväg 77 SE-90580 Umeå Sweden, Phone +46 90 160650, Fax +46 90 160651, info@seaflex.net, www.seaflex.net
Seaflex Inc. 200 E. 5th Ave., Ste 124 Naperville, IL 60563 USA Phone (714) 883 3413, Fax (321) 406 0612 seaflex.inc@seaflex.net